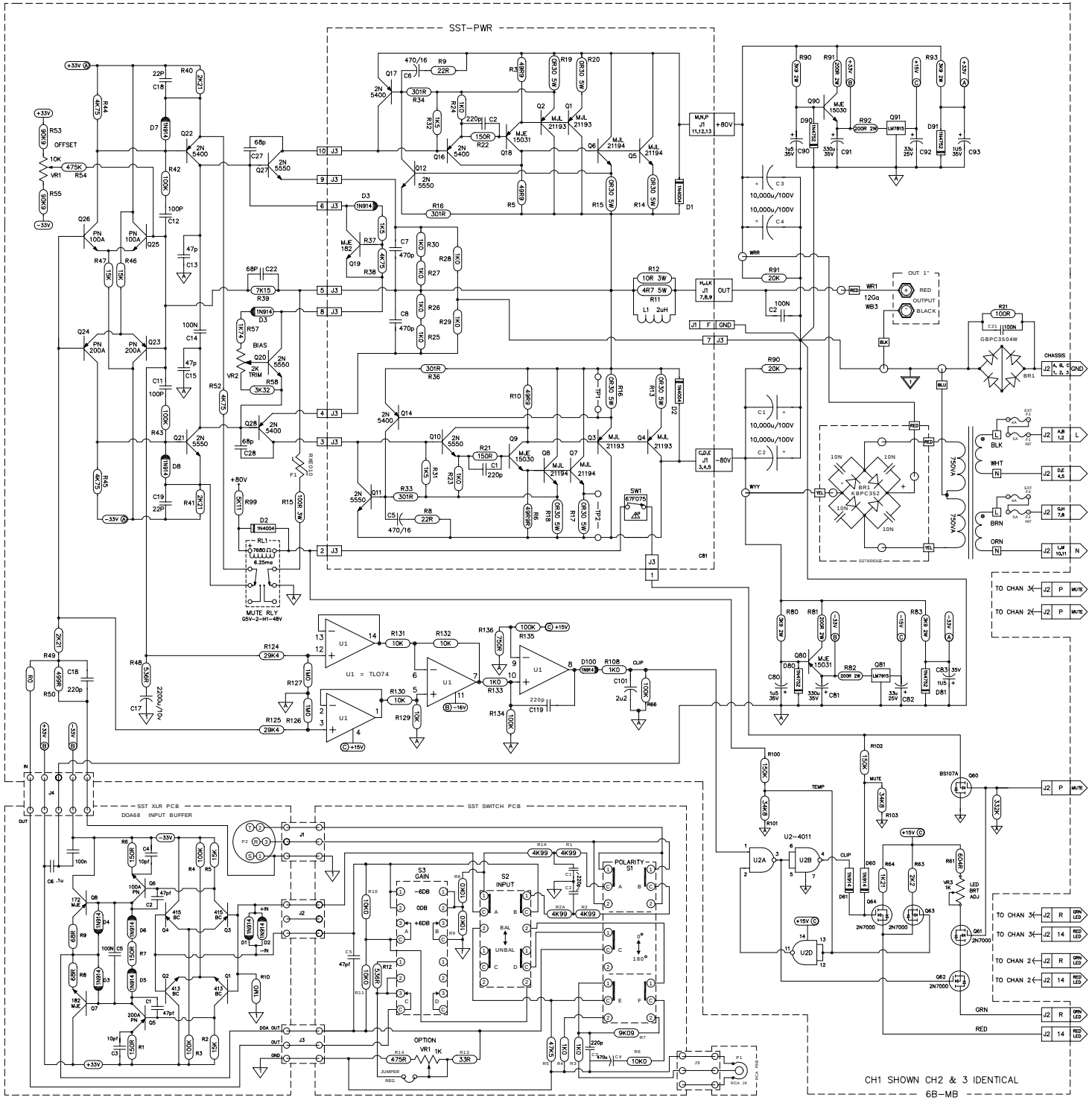

6B-SST CHANNEL & SOFTSTART SCHEMATIC Revision 1A 25 JULY 2002

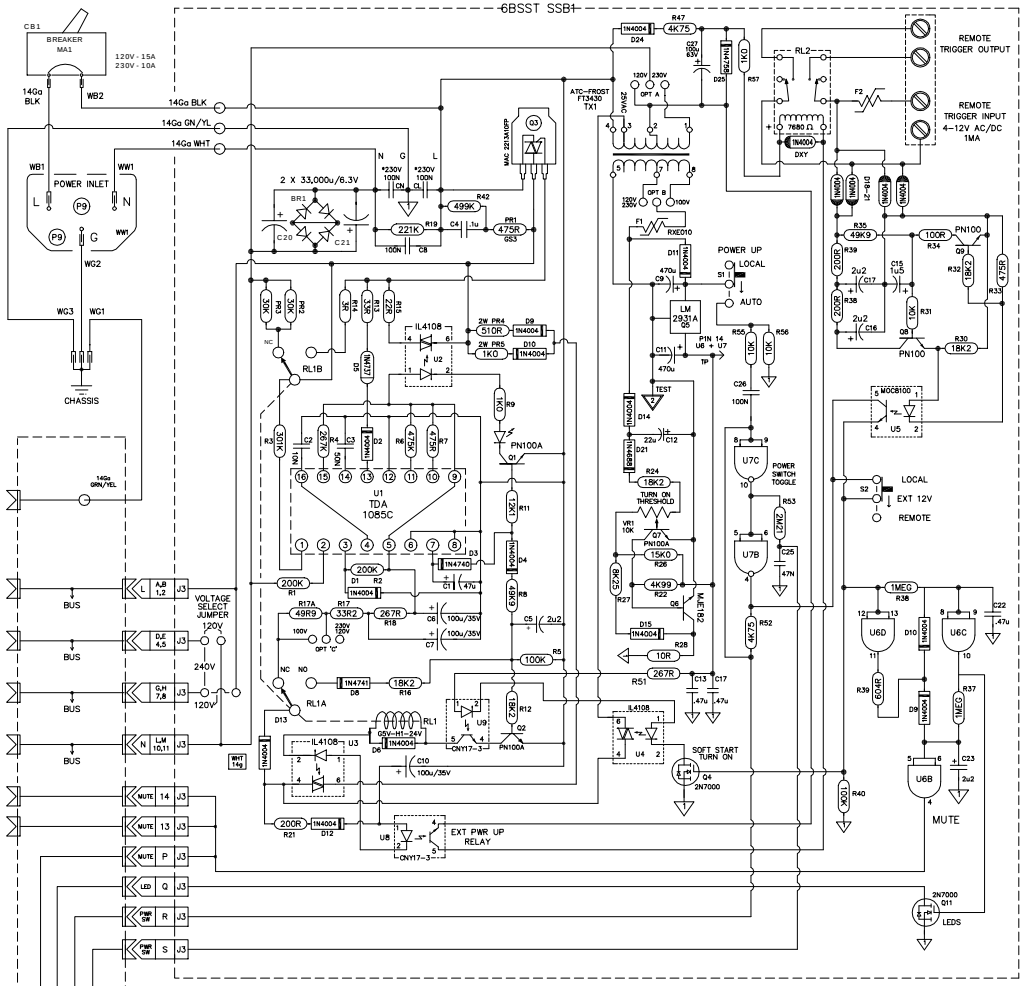

REV 9A ADD R10 TO DOA (+) INPUT
CHANGE R16, 33, 34 + 36 TO 301R ECO-616

NOTES

U6 = 4081
U7 = 4011

GROUND SYMBOLS

- POWER GROUND
- CHASSIS GROUND LOGIC
- LOW VOLTAGE COMMON
- CHASSIS GROUND

TRANSISTORS

CASE TO-126 77-04 — MJE182 MJE172 — E C B
CASE 221A-02 — MJE15030 MJE15031 — B C E
CASE 340G-02 TO-3PBL — MJL21193 MJL21194 — B C E
CASE TO92 — 1 S 2 D 3 G — 2N7000
TFET 2N7000 — S G D
PN100A PN200A — E B C
2N5550 2N5400 — E B C

BRYSTON LTD
677 NEAL DR. PETERBOROUGH, ONTARIO CANADA K9J 7Y4
PHONE (705) 742-5325 FAX (705) 742-0882

6BSST

CHANNEL + SOFTSTART SCHEMATIC

FILE: 6BSST-SCH1 PART No:

DATE: 25 JULY 2002 | DWG BY: ST | REV: 1A